OPERATION/MAINTENANCE MANUAL & PARTS LIST

PL Series 2-Stage Pressure Lubricated Air Compressor & Units Featuring the PL30A Pump

⚠ WARNING

THIS MANUAL CONTAINS IMPORTANT SAFETY INFORMATION AND SHOULD ALWAYS BE AVAILABLE TO THOSE PERSONNEL OPERATING THIS UNIT.
READ, UNDERSTAND AND RETAIN ALL INSTRUCTIONS BEFORE OPERATING THIS EQUIPMENT TO PREVENT INJURY OR EQUIPMENT DAMAGE.

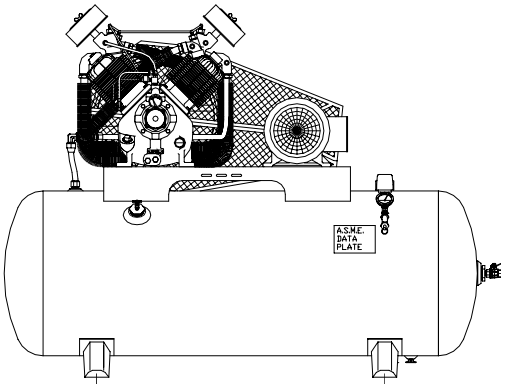

C360-A
(Ref. Drawing)

HPL10-12 UNIT

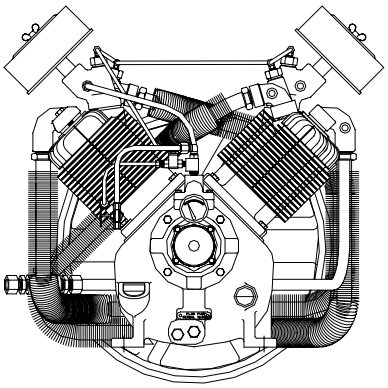

C328-A
(Ref. Drawing)

PL30A PUMP

Form No. F102193PLA VER: 01 04/23/02

MAINTAIN COMPRESSOR RELIABILITY AND PERFORMANCE WITH GENUINE CHAMPION COMPRESSOR PARTS AND SUPPORT SERVICES

Champion Compressor genuine parts, manufactured to design tolerances, are developed for optimum dependability – specifically for Champion compressor systems. Design and material innovations are the result of years of experience with hundreds of different compressor applications. Reliability in materials and quality assurance are incorporated in our genuine replacement parts.

Your authorized Champion Compressor distributor offers all the backup you'll need. A worldwide network of authorized distributors provides the finest product support in the air compressor industry.
Your authorized distributor can support your Champion air compressor with these services:

1. Trained parts specialists to assist you in selecting the correct replacement parts.
2. A full line of factory tested CHAMPLUB™ compressor lubricants specifically formulated for use in Champion compressors.
3. Repair and maintenance kits designed with the necessary parts to simplify servicing your compressor.

Authorized distributor service technicians are factory trained and skilled in compressor maintenance and repair. They are ready to respond and assist you by providing fast, expert maintenance and repair services.

For the location of your local authorized Champion Air Compressor distributor, refer to the yellow pages of your phone directory or contact:

Factory:
Champion
1301 North Euclid Avenue
Princeton, IL 61356

Phone: (815) 875-3321

Fax: (815) 872-0421
E-Mail: Champion@Champion pneumatic . com

INSTRUCTIONS FOR ORDERING REPAIR PARTS

When ordering parts, specify Compressor MODEL, HORSEPOWER and SERIAL NUMBER (see nameplate on unit). All orders for Parts should be placed with the nearest authorized distributor.

Order by part number and description. Reference numbers are for your convenience only.

TABLE OF CONTENTS

EXPLANATION OF SAFETY INSTRUCTION SYMBOLS AND DECALS

DANGER
Indicates immediate hazards which will result in severe injury or death.

WARNING
Indicates hazards or unsafe practice which could result in severe injury or death.

CAUTION
Indicates hazards or unsafe practice which could result in damage to the Champion compressor or minor injury.

NOTICE
Notice is used to notify people of installation, operation or maintenance information which is important but not hazard-related.

SAFETY AND OPERATION PRECAUTIONS

OBSERVE, UNDERSTAND AND RETAIN THE INFORMATION GIVEN IN THE SAFETY PRECAUTION DECALS AS SHOWN IN THE PARTS LIST SECTION

DANGER
This reciprocating compressor must not be used for breathing air. To do so will cause serious injury whether air is supplied direct from the compressor source or to breathing tanks for later use. Any and all liabilities for damage or loss due to injury, death and/or property damage including consequential damages stemming from the use of this compressor to supply breathing air, will be disclaimed by the manufacturer.

WARNING
The use of this compressor as a booster pump and/or to compress a medium other than atmospheric air is strictly non-approved and can result in equipment damage and/or injury.

CAUTION
This unit may be equipped with special options which may not be included in this manual. User must read, understand and retain all information sent with special options.

SAFETY AND OPERATION PRECAUTIONS

Because an air compressor is a piece of machinery with moving and rotating parts, the same precautions should be observed as with any piece of machinery of this type where carelessness in operation or maintenance is hazardous to personnel. In addition to the many obvious safety rules that should be followed with this type of machinery, the additional safety precautions as listed below must be observed:

1. Read all instructions completely before operating air compressor or unit.
2. For installation, follow all local electrical and safety codes, as well as the National Electrical Code (NEC) and the Occupational Safety and Health Act (OSHA).
3. Electric motors must be securely and adequately grounded. This can be accomplished by wiring with a grounded, metal-clad raceway system to the starter; by using a separate ground wire connected to the bare metal of the motor frame; or other suitable means.
4. Protect the power cable from coming in contact with sharp objects. Do not kink power cable and never allow the cable to come in contact with oil, grease, hot surfaces, or chemicals.
5. Make certain that the power source conforms to the requirements of your equipment.
6. Pull main electrical disconnect switch and disconnect any separate control lines, if used, before attempting to work or perform maintenance on the air compressor or unit. "Tag Out" or "Lock Out" all power sources.
7. Do not attempt to remove any compressor parts without first relieving the entire system of pressure.
8. Do not attempt to service any part while machine is in an operational mode.
9. Do not operate the compressor at pressures in excess of its rating.
10. Do not operate compressor at speeds in excess of its rating.
11. Periodically check all safety devices for proper operation. Do not change pressure setting or restrict operation in any way.
12. Be sure no tools, or rags or loose parts are left on the compressor or drive parts.
13. Do not use flammable solvents for cleaning the air inlet filter or element and other parts.
14. Exercise cleanliness during maintenance and when making repairs. Keep dirt away from parts by covering parts and exposed openings with clean cloth or Kraft paper.
15. Do not operate the compressor without guards, shields and screens in place.
16. Do not install a shut-off valve in the discharge line, unless a pressure relief valve, of proper design and size, is installed in the line between the compressor unit and shut-off valve.
17. Do not operate compressor in areas where there is a possibility of ingesting flammable or toxic fumes.
18. Be careful when touching the exterior of a recently run motor - it may be hot enough to be painful or cause injury. With modern motors this condition is normal if operated at rated load - modern motors are built to operate at higher temperatures.
19. Inspect unit daily to observe and correct any unsafe operating conditions found.
20. Do not "play around" with compressed air, nor direct air stream at body, because this can cause injuries.
21. Compressed air from this machine absolutely must not be used for food processing or breathing air without adequate downstream filters, purifiers and controls.
22. Always use an air pressure regulating device at the point of use, and do not use air pressure greater than marked maximum pressure of attachment.
23. Check hoses for weak or worn condition before each use and make certain that all connections are secure.
24. Always wear safety glasses when using a compressed air blowgun.

The user of any air compressor package manufactured by Champion is hereby warned that failure to follow the preceding Safety and Operation Precautions can result in injuries or equipment damage. However, Champion does not state as fact or does not mean to imply that the preceding list of Safety and Operating Precautions is all inclusive, and further that the observance of this list will prevent all injuries or equipment damage.

INTRODUCTION

Champion PL Series compressors are the result of advanced engineering and skilled manufacturing. To be assured of receiving maximum service from this machine the owner must exercise care in its operation and maintenance. This book is written to give the operator and maintenance department essential information for day-to-day operation, maintenance and adjustment. Careful adherence to these instructions will result in economical operation and minimum downtime.

WARRANTY

Champion Five Year Warranty
"PL" Series Compressors

CHAMPION warrants each new compressor pump manufactured by **CHAMPION**, mounted on a factory assembled unit, to be free from defects in material and workmanship under normal use and service for a period of sixty (60) months from date of installation or sixty-six (66) months from date of shipment by **CHAMPION** or **CHAMPION** distributor, whichever may occur first. **Applies to the compressor pump <u>only</u>, excluding head valves. Valves, controls and accessories are warranted for the first year only.** Compressor pumps purchased separately would carry a one year warranty.

This five year extended warranty will be prorated over the 5 years as follows:

First Year	-	100% Allowance, Parts and Labor
Second Year	-	90% Allowance, Parts and Labor
Third Year	-	80% Allowance, Parts and Labor
Fourth Year	-	70% Allowance, Parts and Labor
Fifth Year	-	60% Allowance, Parts and Labor

Applies to CHAMPION logo, tank or base mounted complete compressors only.

Express Limited Warranty

CHAMPION warrants each new air compressor unit manufactured by **CHAMPION** to be free from defects in material and workmanship under normal use and service for a period of twelve (12) months from date of installation or eighteen (18) months from date of shipment by **CHAMPION** or **CHAMPION** distributor, whichever may occur first.

CHAMPION makes no warranty in respect to components and accessories furnished to **CHAMPION** by third parties, such as **ELECTRIC MOTORS, GASOLINE ENGINES** and **CONTROLS**, which are warranted only to the extent of the original manufacturer's warranty to **CHAMPION**. To have warranty consideration, electric motors must be equipped with thermal overload protection.

The extended five year warranty will apply to ASME air receivers provided they are installed on rubber vibro isolator pads or approved equivalent.

When a compressor pump, or component is changed or replaced during the warranty period, the new/replaced item is warranted for only the remainder of the original warranty period.

Repair, replacement or refund in the manner and within the time provided shall constitute **CHAMPION'S** sole liability and your exclusive remedy resulting from any nonconformity or defect. **CHAMPION** SHALL NOT IN ANY EVENT BE LIABLE FOR ANY DAMAGES, WHETHER BASED ON CONTRACT, WARRANTY, NEGLIGENCE, STRICT LIABILITY OR OTHERWISE, INCLUDING WITHOUT LIMITATION ANY CONSEQUENTIAL, INCIDENTAL OR SPECIAL DAMAGES, ARISING WITH RESPECT TO THE EQUIPMENT OR ITS FAILURE TO OPERATE, EVEN IF **CHAMPION** HAS BEEN ADVISED OF THE POSSIBILITY THEREOF.

CHAMPION MAKES NO OTHER WARRANTY OR REPRESENTATION OF ANY KIND, EXCEPT THAT OF TITLE, AND ALL OTHER WARRANTIES, EXPRESS OR IMPLIED, INCLUDING WARRANTIES OR MERCHANTABILITY AND FITNESS FOR A PARTICULAR PURPOSE, ARE HEREBY EXPRESSLY DISCLAIMED. NO SALESMAN OR OTHER REPRESENTATIVE OF **CHAMPION** HAS AUTHORITY TO MAKE ANY WARRANTIES

TWO STAGE AIR COMPRESSORS - MODEL PL30A

DIMENSIONS

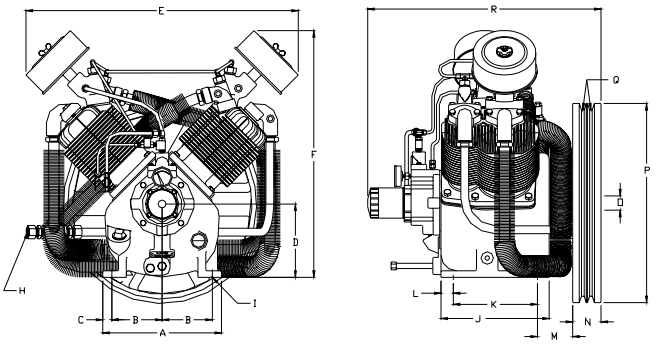

C-329-A
(Ref. Drawing)

	ITEM	PL30A
A	Base-Width	11-3/8”
B	Bolt Down-Width	4-13/16”
C	Bolt Down to Edge	3/4”
D	Base to Crank Ctr	7”
E	Overall Width	26-1/2”
F	Overall Height	23-9/16”
H	Exhaust Opening	3/4 NPT
I	Bolt Down Hole Dia.	17/32”
J	Base-Depth	10-7/16”
K	Bolt Down Depth	8-1/16”
L	Bolt Down to Edge	1-3/16”
M	Bolt Hole to Wheel (Max.)	3-3/8”
N	Flywheel Width	2-23/32”
O	Crank Diameter	1-3/4”
P	Flywheel Diameter	18-7/8”
Q	Flywheel Grooves	2VB
R	Overall Depth	22-3/8”

NOTE: Flywheel Rotation – Clockwise when viewed from front, flywheel to rear.

SPECIFICATIONS

MODEL	BORE & STROKE (INCH)	NO. of CYLINDERS	OIL CAPACITY (QTS)	WEIGHT (LBS)	MAXIMUM PRESSURE (PSIG)	CU FT./REV.	MIN./MAX. RPM.
PL30A	4-5/8" & 2-1/2" x 3"	4	4	248	250	.0583	400/1050

Standard units are set up for 175 PSIG operation. High pressure units are set for the higher 250 PSIG range and come with the special tanks, pressure switches, pressure relief valves, pulleys and pilot valves. To determine the pressure setting of a particular compressor check the pressure setting decal located on the air tank.

Note that 175 PSIG units cannot be converted to safely operate at pressures above 200 PSIG unless all the above mentioned components including the air tank are replaced with 250 PSIG rated items. Refer to parts list for applicable part numbers.

PERFORMANCE

PUMP	OUTPUT PRESS. PSIG	MOTOR H.P.	PUMP RPM	DISPL. CFM	COOLING AIR FLOW CFM	HEAT REJECTION BTU/HR	APPROX. PULLEY O.D., INCHES
PL30A	175	7.5	575	33.5	835	16,800	6.2
PL30A	175	10	740	43.1	1075	22,400	8.15
PL30A	175	15	1035	60.3	1505	33,600	11.35
PL30A	250	7.5	520	30.3	755	16,800	5.75
PL30A	250	10	640	37.3	930	22,400	7.0
PL30A	250	15	900	52.5	1310	33,600	9.95

All data is based on 1725 RPM electric motors as a power source.

$$\text{Pulley Dia. (approx.)} = \frac{\text{Compressor RPM x Flywheel Dia.}}{\text{Motor or Engine RPM}}$$

INSTALLATION

WARNING

Do not operate unit if damaged during shipping, handling or use. Operating unit if damaged may result in injury.

1. Permanently installed compressors must be located in a clean, well ventilated dry room so compressor receives adequate supply of fresh, clean, cool and dry air. It is recommended that a compressor, used for painting, be located in a separate room from that area wherein body sanding and painting is done. Abrasive particles or paint, found to have clogged the air intake filters and intake valves, shall automatically void warranty.
2. Compressors should never be located so close to a wall or other obstruction that flow of air through the fan blade flywheel, which cools the compressor, is impeded. Permanently mounted units should have flywheel at least 12" from wall.
3. Place stationary compressors on firm level ground or flooring. Permanent installations require bolting to floor. Bolt holes in tank or base feet are provided. Before bolting or lagging down, shim compressor level. Avoid putting a stress on a tank foot by pulling it down to floor. This will only result in abnormal vibration, and possible cracking of air receiver. It is recommended that unit be set on optional vibro-isolator pads. Tanks bolted directly to a concrete floor without isolators will not be warranted against cracking. Champion vibro-isolators or approved equivalent must be installed for extended warranty to apply to ASME receivers.
4. If installing a bare pump, or base mounted unit, make certain the pressure limiting controls are properly installed and operational. The PL model pump is supplied with a pilot valve, but a pressure switch must be provided by customer for start/stop operation. The hydraulic unloading system requires a control air pressure line from the air receiver to be connected to the pilot valve fitting on the pump.

DANGER

Do not install isolating valves between compressor outlet and air receiver. This will cause excessive pressure if valve is closed and cause injury and equipment damage.

WARNING

Always use an air pressure regulating device at the point of use. Failure to do so can result in injury or equipment damage.

CAUTION

- **Do not install in an area where ambient temperature is below 32 degrees F or above 100 degrees F.**
- **Do not install unit in an area where air is dirty and/or chemical laden.**
- **Unit is not to be installed outdoors.**

ELECTRICAL POWER SUPPLY

It is essential that he power supply and the supply wiring are adequately sized and that the voltage correspond to the unit specifications. Branch circuit protection must be provided at installation a specified in the National Electrical Code.

All wiring should be preformed by a licensed electrician or electrical contractor. Wiring must meet applicable codes for area of installation. The table gives recommended wire sizes based on the 1999 NEC.

WIRE SIZE (AWG) – 75°C COPPER – 30°C AMBIENT

MOTOR HP	3 PHASE				1 PHASE
	200/208V	230V	460V	575V	230V
7-1/2	8 (6)	10 (6)	14 (10)	14 (10)	8 (4)
10	8 (4)	8 (4)	12 (8)	14 (10)	8 (3)
15	6 (2)	6 (3)	10 (6)	10 (8)	---

Values in ( ) for Duplex Unit w/one incoming power line to both motors.

INSTALLATION (CONT'D)

All models require a properly sized magnetic starter as specified in the National Electric Code (NEC).
See Figure 1-1 for simplex wiring diagram and Figure 1-2 for duplex wiring diagram.

If ordered with a factory mounted magnetic starter, compressor is wired at factory. It is necessary only to bring lines from a properly sized disconnect switch to the magnetic starter mounted on the unit.

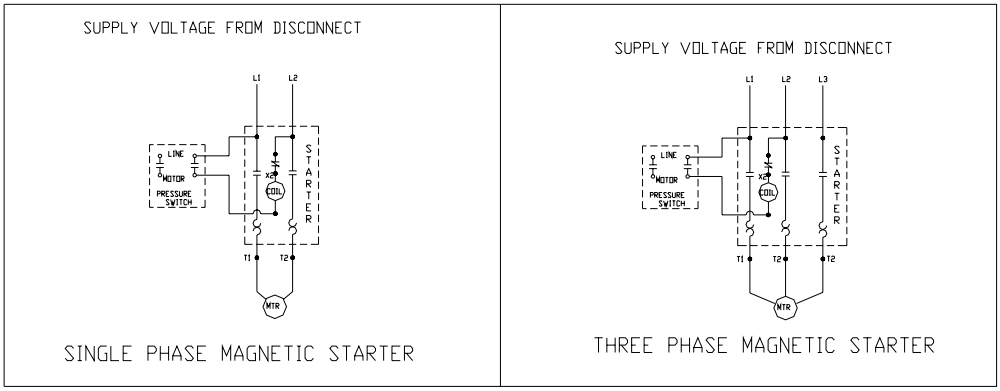

Figure 1-1 Simplex Wiring Diagram

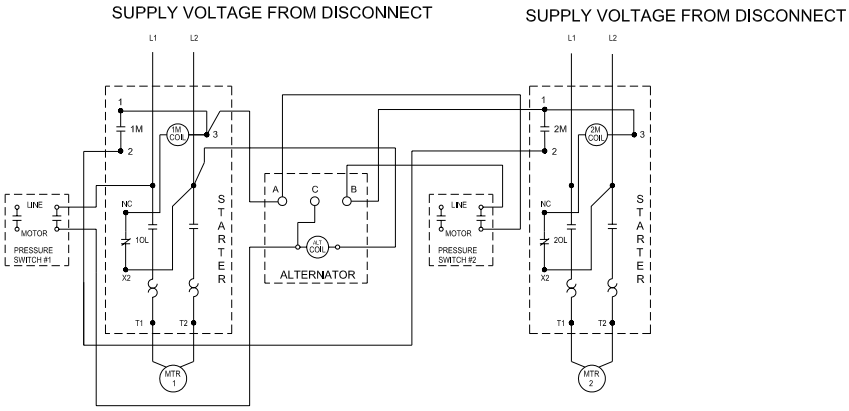

B1164-A
(Ref. Drawing)

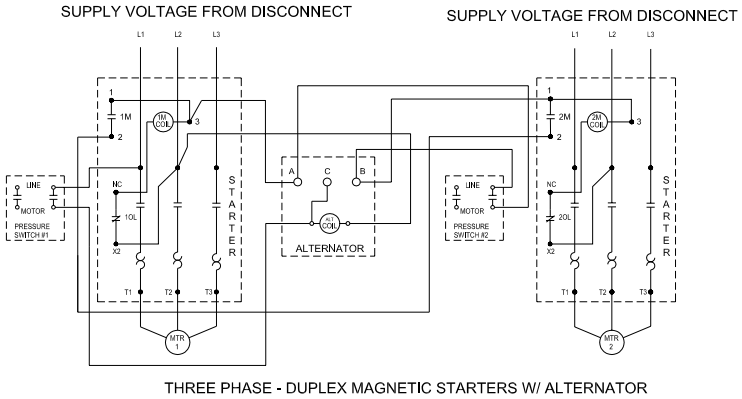

B1165-A
(Ref. Drawing)

Figure 1-2 Duplex Wiring Diagram

CAUTION
Wiring must be such that when viewing compressor from opposite shaft end, rotation of shaft is clockwise as shown by arrow on guard. Wrong direction rotation for any length of time will result in damage to compressor.

GROUNDING INSTRUCTIONS

This product should be connected to a grounded, metallic, permanent wiring system, or an equipment-grounding terminal or lead on the product.

AIR LINE PIPING

Connection to air system should be of the same size, or larger, than discharge pipe out of unit. The table gives recommended minimum pipe sizes. A union connection to the unit and water drop leg is recommended. Install a flexible connector between the discharge of the unit and the plant air piping. Plant air piping should be periodically inspected for leaks using a soap and water solution for detection on all pipe joints. Air leaks waste energy and are expensive.

Minimum Pipe Sizes For Compressor Air Lines
(Based on clean Smooth Schedule 40 Pipe)

MODEL	25’	50’	100’	200’	300’
PL30A	3/4” (1-1/4”)	1” (1-1/4”)	1” (1-1/4”)	1” (1-1/2”)	1” (1-1/2”)

Values in ( ) are for duplex unit.

⚠ WARNING

Never use plastic pipe or improperly rated metal pipe. Improper piping material can burst and cause injury or property damage.

OPERATION

This compressor has been inspected, thoroughly tested and approved at the factory. For this unit to give long satisfactory service it must be installed and operated properly.

Simplex units have a pressure switch that senses changes in receiver pressure and automatically starts and stops the compressor at preset pressure limits. If the receiver pressure falls below the cut-in pressure setting of the pressure switch the compressor will run until the cut-out pressure setting of the pressure switch has been reached.

Duplex units have lead and lag pressure switches and an automatic alternating system to evenly distribute the load between the two compressors. The pressure switches sense changes in receiver pressure and automatically start and stop the compressor at preset pressure levels. If the receiver pressure falls below the cut-in pressure setting of the lead pressure switch but remains above the cut-in pressure setting of the lag pressure switch, only one compressor will run until receiver pressure reaches the cut-out pressure of the lead pressure switch. The next time the pressure in the receiver drops, the system automatically starts the compressor that was idle. If the receiver pressure falls below the cut-in pressure setting of the lag pressure switch, both compressors run until receiver pressure reaches the cut-out pressure setting of the lead pressure switch.

PL30A models are equipped with a needle valve, pilot valve and head unloaders to provide continuous run capabilities. The pilot valve acts as an automatic air switch allowing air to flow from the receiver to the head unloader mechanism, thus actuating it. To operate unit in continuous run, open needle valve located next to pilot valve. The pilot valve is now able to sense receiver pressure. When the receiver pressure reaches the cut-out pressure setting of the pilot valve, the pilot valve opens and air is released to the unloader mechanism. The compressor stops compressing air and runs unloaded until the cut-in pressure setting of the pilot valve has been reached. At this time air released from the unloader mechanism and the compressor starts compressing again. Continuous run is recommended if motor starts exceed 8 starts/hour.

OPERATION (CONT'D)

Initial Start Up

1. Inspect unit for any visible signs of damage that would have occurred in shipment or during installation.

2. Pull main disconnect switch to unit to assure that no power is coming into the unit. "Lock Out" or "Tag Out" switch. Connect power leads to starter.

⚠ **WARNING**
Do not attempt to operate compressor on voltage other than that specified on order or on compressor motor.

3. Check compressor oil level. Add oil as required. See "Compressor Oil Specifications" Section. **NOTE**: Do not mix oil type, weights or brands.

4. Activate main disconnect switch.

5. "Jog" motor and check for proper rotation by direction arrow. If rotation is wrong, reverse input connections on the magnetic starter.

6. Close receiver outlet hand valve and start.

7. With receiver hand valve closed, let machine pump up to operating pressure. At this stage the automatic controls will take over. Check for proper cycling operation.

8. This compressor is equipped with a pressure lubrication system. The oil pressure gauge is located on the bearing housing on the front of the crankcase. During operation oil pressure should normally be between 15 PSIG and 30 PSIG. Oil pressure cand drop to 10 PSIG with no adverse operation. Oil pressure is maintained internally in the oil pump, so no adjustment is required.

9. Check for proper operation of any options. Refer to individual option instruction sheet.

10. When the initial run period has shown no operating problems, shut unit down and recheck oil level.

11. Open receiver hand valve. The air compressor unit is now ready for use.

⚠ **WARNING**
This unit can start automatically without warning.

GUIDE TO MAINTENANCE

For Service contact an authorized Champion distributor. All requests should include model number and serial number. To obtain reliable and satisfactory service, this unit requires a consistent preventive maintenance schedule. Maintenance schedule form is included to aid in keeping the proper records.

WARNING

Before performing any maintenance function, switch main disconnect switch to "off" position to assure no power is entering unit. "Lock Out" or "Tag Out" all sources of power. Be sure all air pressure in unit is relieved. Failure to do this may result in injury or equipment damage.

DAILY MAINTENANCE

1. Check oil level of compressor. Add Champlub recip lubricant as required. See “Compressor Oil Specifications” Section. **NOTE**: Do not mix oil type, weight, or brands.

2. Drain moisture from tank by opening tank drain cock located in bottom of tank. Do not open drain valve if tank pressure exceeds 25 PSIG.

3. Turn off compressor at the end of each day's operation. Turn off power supply at wall switch.

WEEKLY MAINTENANCE

1. Clean dust and foreign matter from cylinder head, motor, fan blade, air lines, intercooler and tank.

2. Remove and clean intake air filters.

WARNING

Do not exceed 15 PSIG nozzle pressure when cleaning element parts with compressed air. Do not direct compressed air against human skin. Serious injury could result. Never wash elements in fuel oil, gasoline or flammable solvent.

3. Check V-belts for tightness. The V-belts must be tight enough to transmit the necessary power to the compressor. Adjust the V-belts as follows:

   Remove bolts and guard to access compressor drive.

   Loosen mounting hardware which secures motor to base. Slide motor within slots of baseplate to desired position.

   Apply pressure with finger to one belt at midpoint span. Tension is correct if top of belt aligns with bottom of adjacent belt. Make further adjustments if necessary.

   Check the alignment of pulleys. Adjust if necessary.

   Tighten mounting hardware to secure motor on base.

   Re-install guard and secure bolts.

WARNING

Never operate unit without belt guard in place. Removal will expose rotating parts which can cause injury or equipment damage.

EVERY 90 DAYS OR 500 HOURS MAINTENANCE

1. Change crankcase oil and oil filter. Use only Champlub recip lubricant.

2. Check entire system for air leakage around fittings, connections, and gaskets, using soap solution and brush.

3. Tighten nuts and cap screws as required.

4. Check and clean compressor valves as required. Replace when worn or damaged parts.

CAUTION
Valves must be replaced in original position. Valve gaskets should be replaced each time valves are serviced.

5. Pull ring on all pressure relief valves to assure proper operation.

GENERAL MAINTENANCE NOTES

PRESSURE RELIEF VALVE: The pressure relief valve is an automatic pop valve. Each valve is properly adjusted for the maximum pressure of the unit on which it is installed. If it should pop, it will be necessary to drain all the air out of the tank in order to reseat properly, or drop pressure in line. Do not readjust.

PRESSURE SWITCH: The pressure switch is automatic and will start compressor at the low pressure and stop when the maximum pressure is reached. It is adjusted to start and stop compressor at the proper pressure for the unit on which it is installed. Do not readjust.

BELTS: Drive belts must be kept tight enough to prevent slipping. If belts slip or squeak, see V-belt maintenance in preceding section.

CAUTION
If belts are too tight, overload will be put on motor and motor bearings.

COMPRESSOR VALVES: If compressor fails to pump air or seems slow in filling up tank, disconnect unit from power source and remove valves and clean thoroughly, using compressed air and a soft wire brush. After cleaning exceptional care must be taken that all parts are replaced in exactly the same position and all joints must be tight or the compressor will not function properly. When all valves are replaced and connections tight, close hand valve at tank outlet for final test. Valve gaskets should be replaced each time valves are removed from pump.

GENERAL MAINTENANCE (Cont'd.)

HYDRAULIC UNLOADER: This compressor is equipped with an unloading device operated by oil pressure. When the compressor is turned off, the unloader will open resulting in a short burst of air from the unloader (released through the intake filter.). When the compressor is restarted, as soon as oil pressure reaches normal operation range (between 15 and 30 PSIG) the unloader valve closes and the compressor begins to pump air. This unloader system provides loadless starting for longer motor life, and has the added feature of preventing the compression of air should the oil pump fail. In the event of loss of oil pressure, the compressor would run in an "unloaded" state only, until correction of the oil pressure is made.

NOTE: If after the compressor shuts off air escapes from the hydraulic unloader for more than a couple of seconds, it indicates the tank check valve is leaking. See "Check Valve" below.

CHECK VALVE: The check valve closes when the compressor stops operating, preventing air from flowing out of the tank through the pressure release. After the compressor stops operating, if air continues to escape through the release valve, it is an indication that the check valve is leaking. This can be corrected by removing check valve and cleaning disc and seat. If check valve is worn badly, replace same.

⚠ **WARNING**
Before removing check valve be sure all air is drained out of tank and power is disconnected. Failure to do so may result in injury or equipment damage.

THE INTERSTAGE PRESSURE RELIEF VALVE is provided to protect against interstage over pressure and is factory set for maximum pressure of 75 PSIG. **DO NOT RESET**
If the pressure relief valve pops, it indicates trouble. Shut down the unit immediately and determine and correct the malfunction. Inspect the head valves. Serious damage can result if not corrected and can lead to complete destruction of the unit. Tampering with the interstage pressure relief valve, or plugging the opening destroys the protection provided and voids all warranty.

COMPRESSOR LUBRICATION: Fill crankcase to proper level as indicated by oil sight gauge. Keep crankcase filled as required by usage. It is recommended that only Champlub recip lubricant be used. This is a 30-weight, non-detergent industrial oil with rust and oxidation inhibitors specially formulated for reciprocating compressors. Do not mix oil types, weights or brands.

MOTOR LUBRICATION: Long time satisfactory operation of an electric motor depends in large measure on proper lubrication of the bearings. Bearing grease will lose its lubricating ability overtime, not suddenly. Refer to the motor manufacturer's instructions for the type of grease and lubrication intervals.

PILOT VALVE: The pilot valve actuates the head unloader mechanism to provide a means of stopping or starting the compression of air by the compressor without stopping or starting the electric motor.

COMPRESSOR PILOT VALVE PRESSURE ADJUSTMENT
Proceed with the following instructions while compressor is running:

1. Loosen locknut (2) and back off several turns.
2. Check reading on the tank pressure gauge. Set the pressure to 30 psig differential (unload at 170 psig, reload at 140 psig). Turn nut (3) clockwise to increase differential pressure or counterclockwise to decrease differential pressure.
3. After pressure is set, tighten locknut (2). Be careful not to move nut (3).

COMPRESSOR PILOT VALVE DIFFERENTIAL PRESSURE ADJUSTMENT

Proceed with the following instructions while compressor is running.:

1. Loosen locknut (2) and back off several turns.

2. Check reading on the tank pressure gauge. Set the pressure to 30 psig differential (unload at 170 psig, reload at 140 psig). Turn nut (3) clockwise to increase differential pressure or counterclockwise to decrease differential pressure.

3. After pressure is set, tighten locknut (2). Be careful not to move nut (3).

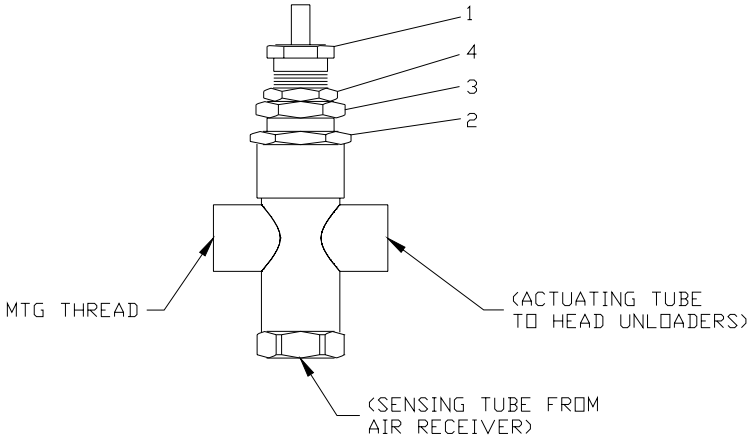

B980-B
(Ref. Drawing)

COMPRESSOR OIL SPECIFICATIONS

Compressors are factory filled with Champlub hydrocarbon based recip lubricant. This is an ISO 100 non-detergent industrial lubricant with rust and oxidation inhibitors specially formulated for reciprocating compressors. It is recommended this compressor be maintained using this oil for ambient temperatures above 32°F.

Champlub synthetic is a premium grade diester based synthetic lubricant providing excellent performance in both high and low temperature applications.

CAUTION
Do not mix oil types, weights or brands.

If changing to the synthetic lubricant, the following steps must be completed.

1. Changing lubricant in a compressor that has not been run.
   - Thoroughly drain existing oil from crankcase.
   - Fill crankcase with a partial carge, 2-1/4 quart, of synthetic lubricant.
   - Run compressor for 5 minutes.
   - Stop compressor and thoroughly drain the synthetic lubricant.
   - Fill crankcase with a full charge.
2. Changing lubricant in a compressor that has been running in the field.
   - Thoroughly drain existing oil from crankcase.
   - Fill crankcase with a full charge of synthetic lubricant.
   - Run compressor for 200 hours.
   - Stop compressor and thoroughly drain the synthetic lubricant.
   - Add a full charge of synthetic lubricant.
   - Compressor now ready to run for extended period before next lubricant change.

LUBRICANT

CHAMPLUB

DESCRIPTION	PART NUMBER
1 – Quart Case (12/case)	P12612A
1 – Gallon Case (4/case)	P12613A
5 – Gallon Pail	P12614A
55 – Gallon Drum	P12615A

CHAMPLUB SYNTHETIC

DESCRIPTION	PART NUMBER
1 – Quart Case (12/case)	P13179A
1 – Gallon Case (4/case)	P13180A
5 – Gallon Pail	P11506A
55 – Gallon Drum	P13181A

TORQUE VALVES

SPECIFIC APPLICATION	FASTENER SIZE & THREAD	TORQUE INCH-POUNDS
BEARING HOUSING BOLT	7/16 – 20	550
CYLINDER FLANGE BOLT	7/16 – 20	400
CONNECTING ROD BOLT	5-16 – 18	230
MANIFOLD BOLT	3/8 – 16	200
FLYWHEEL BOLT	1/2 – 13	600

TROUBLE SHOOTING CHART FOR COMPRESSOR

⚠ WARNING

Always disconnect unit from power supply and relieve all pressure from air tank before performing any maintenance. "Tag Out" or "Lock Out" all power sources. Failure to do so may result in equipment damage or injury.

Never operate unit without belt guard in place.

Never use gasoline or flammable solvent on or around compressor unit. Explosion may result.

Troubleshooting Chart

Symptom	Possible Cause(s)	Corrective Action
Motor will not start.	1. Main switch and fuses open. 2. Starter heater coils open. 3. Starter tripped 4. Defective pressure switch-contacts will not close 5. Low voltage.	1. Check all fuses and switches. Check for loose or faulty wires. 2. Check overload relay in starter. Reset starter. 3. Reset starter. If starter trips repeatedly, have electrical system inspected by an electrician. 4. Repair or replace pressure switch. ⚠ **Warning –** Relieve tank pressure before servicing. 5. Check with voltmeter. Be sure voltage corresponds to unit specifications.
Starter trips repeatedly.	1. Improperly adjusted pressure switch. 2. Faulty check valve. 3. Incorrect fuse size or magnetic starter heaters. 4. Low voltage. 5. Defective motor.	1. Adjust or replace. ⚠ **Warning –** Relieve tank pressure before servicing. 2. Clean or replace ⚠ **Warning –** Relieve tank pressure before servicing. 3. Be sure that fuses and heaters are properly rated. 4. Check with voltmeter. Be sure voltage corresponds to unit specifications. 5. Replace motor.
Tank pressure builds up slowly.	1. Air leaks. 2. Dirty air filter. 3. Defective compressor valves	1. Tighten fittings. 2. Clean or replace. 3. Install new valve plate assembly.
Tank pressure builds up quickly.	1. Excessive water in tank.	1. Drain tank.
Discharge pressure relief valve pops off while compressor is running.	1. Wrong pressure switch setting. 2. Defective ASME relief valve.	1. Adjust to correct setting. 2. Replace valve. ⚠ **Warning** – Relieve tank pressure before servicing.
Compressor will not unload	1. Wrong pilot valve setting. 2. Defective pilot valve. 3. Lack of air to pilot valve..	1. Adjust to correct stting 2. Replace pilot valve. 3. Open needle valve to pilot valve.
Excessive belt wear.	1. Pulley out of alignment. 2. Belts too tight or too loose.	1. Realign motor pulley. 2. Adjust belt tension.
Compressor runs hot.	1. Improper flywheel rotation 2. Defective compressor valves. 3. Dirty air filter. 4. Dirty cylinder and/or intercooler.	1. Check for correct rotation. (Counter clockwise when viewed from drive side. 2. Install new valve plate assembly. 3. Clean or replace. 4. Clean cylinder fins and/or intercooler.
Interstage pressure relief valve pops off.	1. Defective compressor valves.	1. Install new valve plate assembly.
Excessive oil consumption.	1. Dirty air filter. 2. Wrong oil viscosity. 3. Oil leaks. 4. Worn piston rings. 5. Scored cylinder	1. Clean or replace. 2. Refill with proper viscosity oil. 3. Tighten bolts. Replace gaskets. 4. Replace rings. 5. Replace cylinder.

Troubleshooting Chart (cont'd)

Symptom	Possible Cause(s)	Corrective Action
Low or loss of oil pressure	1. Low crancase level. 2. Oil pickup screen clogged. 3. Faulty oil pump..	1. Check oil level. Add oil if required. 2. Drain oil from crankcase. Remove oil pickup screen and clean. Reinstall screen and all clean oil to crankcase. 3. Replace oil pump.
System does not alternate (Duplex units only)	1. Starter tripped. 2. Loose wiring in alternator. 3. Defective alternator. 4. Defective motor.	1. Reset starter. If starter trips repeatedly, have electrical system inspected by an electrician. 2. Check and tighten all wiring connections. 3. Replace alternator. 4. Replace motor.

UNIT REPAIR PARTS ILLUSTRATION
MODELS: HPL7-8, HPL7-12, HPL10-8, HPL10-12, HPL15F-12, & HPL15F-25

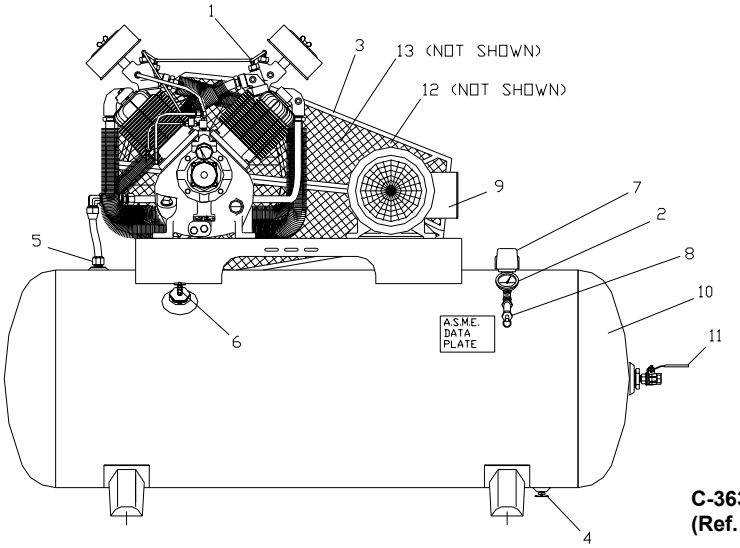

C-363-A
(Ref. Drawing)

REPAIR PARTS LIST

			MODEL					
			HPL7-8	HPL7-12	HPL10-8	HPL10-12	HPL15F-12	HPL15F-25
1	Pump		PL30A	PL30A	PL30A	PL30A	PL30A	PL30A
2	Pressure Gauge		M519C	M519C	M519C	M519C	M519C	M519C
3	Belt Guard		Z650	Z650	Z650	Z650	Z650	Z650
4	Drain Valve		M2684	M2684	M2684	M2684	M2684	M2684
5	Check Valve		P05822A	P05822A	P05822A	P05822A	P05822A	P05822A
6	Bucket High Drain		Z1541	Z1542	Z1541	Z1542	Z1542	Z1542
7	Pressure Switch	175 PSIG	P14202A	P14202A	P14202A	P14202A	P14202A	P14202A
		250 PSIG	P07422A	P07422A	P07422A	P07422A	P07422A	P07422A
8	Pressure Relief Valve	175 PSIG	M2843	M2843	M2843	M2843	M2843	M2843
		250 PSIG	M2845	M2845	M2845	M2845	M2845	M2845
9	Motor		7.5HP	7.5HP	10HP	10HP	15HP	15HP
10	Tank	175 PSIG	P01400D	P01596D	P01400D	P01596D	P01596D	P03564D
		250 PSIG	P07435D	P07434D	P07435D	P07434D	P07434D	P07432D
11	Isolation Valve		M2686	M2686	M2686	M2686	M2686	M2686
12	Pulley	175 PSIG	M2938	M2938	M2920	M2920	P10718A PULLEY P05622A BUSHING	P10718A PULLEY P05622A BUSHING
12	Pulley	250 PSIG	P05008A PULLEY P08632A BUSHING	P05008A PULLEY P08632A BUSHING	M7011D	M7011D	P07981A PULLEY P05622A BUSHING	P07981A PULLEY P05622A BUSHING
13	Belts		B80 (2)	B80 (2)	B81 (2)	B81 (2)	B85 (2)	B85 (2)

UNIT REPAIR PARTS ILLUSTRATION
MODELS: VPL7- 8, VPL7-12, VPL10-8, & VPL10-12

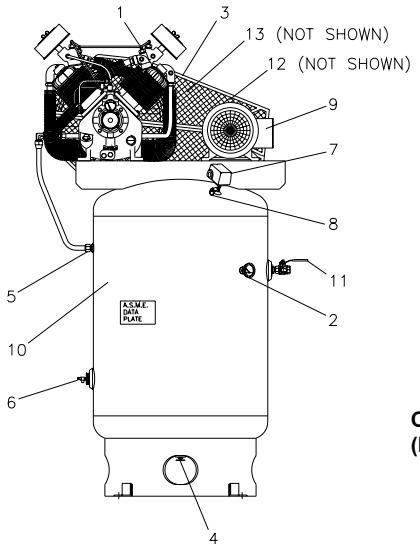

C-362A
(Ref. Drawing)

REPAIR PARTS LIST

			MODEL			
			VPL7-8	VPL7-12	VPL10-8	VPL10-12
1	Pump		PL30A	PL30A	PL30A	PL30A
2	Pressure Gauge		M519C	M519C	M519C	M519C
3	Belt Guard		Z650	Z650	Z650	Z650
4	Drain Valve		M2684	M2684	M2684	M2684
5	Check Valve		P05822A	P05822A	P05822A	P05822A
6	Bucket High Drain		Z1541	Z1541	Z1541	Z1541
7	Switch	175 PSIG	P14202A	P14202A	P14202A	P14202A
		250 PSIG	P07422A	P07422A	P07422A	P07422A
8	Pressure Relief Valve	175 PSIG	M2843	M2843	M2843	M2843
		250 PSIG	M2845	M2845	M2845	M2845
9	Motor		7.5HP	7.5HP	10HP	10HP
10	Tank	175 PSIG	P05944D	P02212D	P05944D	P02212D
		250 PSIG	P10595D	P07782D	P10595D	P07782D
11	Isolation Valve		M2686	M2686	M2686	M2686
12	Pulley	175 PSIG	M2938	M2938	M2920	M2920
12	Pulley	250 PSIG	P05008A PULLEY P08632A BUSHING	P05008A PULLEY P08632A BUSHING	M7011D	M7011D
13	Belts		B80 (2)	B80 (2)	B81 (2)	B81 (2)

UNIT REPAIR PARTS ILLUSTRATION
MODELS: BPL-7, BPL-10, & BPL-15F

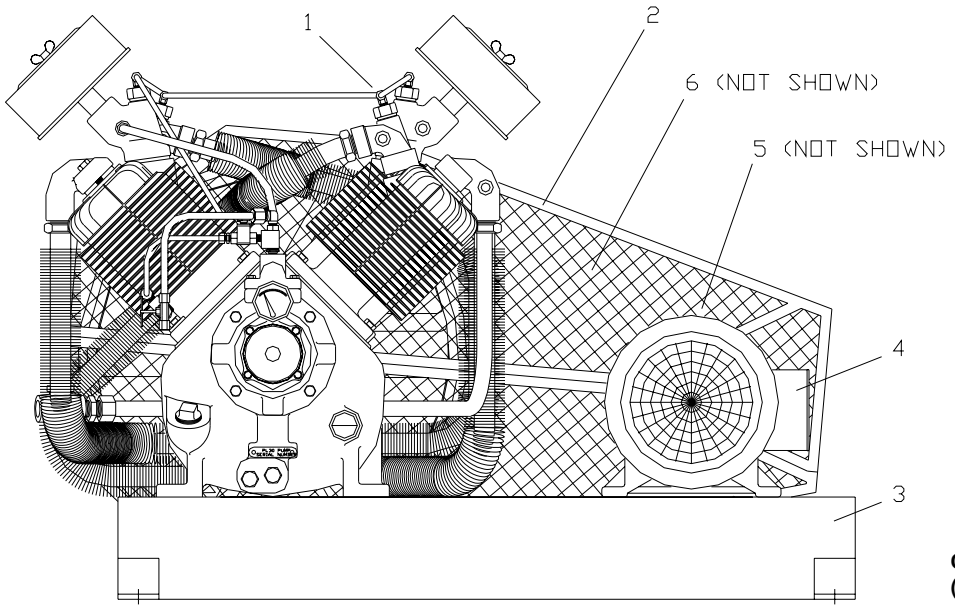

C-361-A
(Ref. Drawing)

REPAIR PARTS LIST

			MODEL		
			BPL-7	BPL-10	BPL-15F
1	Pump		PL30A	PL30A	PL30A
2	Belt Guard		Z650	Z650	Z650
3	Base Plate		P03970C	P03970C	P03970C
4	Motor		7.5 HP	10 HP	15 HP
5	Pulley	175 PSIG	M2938	M2920	P10718A Pulley P5622A Bushing
5	Pulley	250 PSIG	P05008A Pulley P08632A Bushing	M7011D	P07981A Pulley P5622A Bushing
6	Belts		B80 (2)	B81 (2)	B85 (2)

UNIT REPAIR PARTS ILLUSTRATION
MODELS: HPL7D-12, HPL7D-25, HPL10D-25, & HPL15DF-25

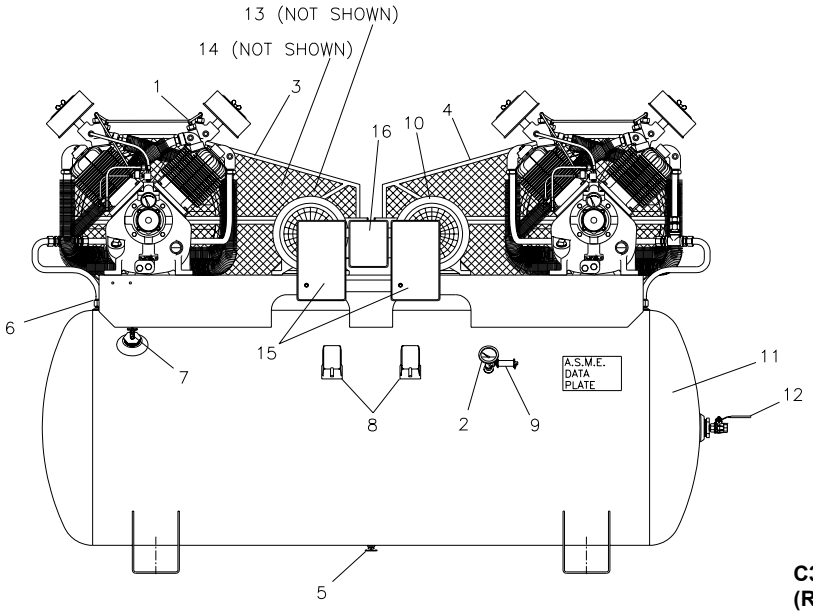

C364-A
(Ref. Drawing)

REPAIR PARTS LIST

			MODEL			
			HPL7D-12	HPL7D-25	HPL10D-25	HPL15DF-25
1	Pump		PL30A	PL30A	PL30A	PL30A
2	Pressure Gauge		M519C	M519C	M519C	M519C
3	Belt Guard		Z650	Z650	Z650	Z650
4	Belt Guard		Z1445	Z1445	Z1445	Z1445
5	Drain Valve		M2684	M2684	M2684	M2684
6	Check Valve		P05822A	P05822A	P05822A	P05822A
7	Bucket High Drain		Z1541	Z1542	Z1542	Z1542
8	Pressure Switch	175 PSIG	P14202A	P14202A	P14202A	P14202A
		250 PSIG	P07422A	P07422A	P07422A	P07422A
9	Pressure Relief Valve	175 PSIG	M2843	M2843	M2843	M2843
		250 PSIG	M2845	M2845	M2845	M2845
10	Motor		7.5 HP	7.5 HP	10 HP	10 HP
11	Tank	175 PSIG	P14129D	P05763D	P05763D	P05763D
		250 PSIG	----------	P12209D	P12209D	P12209D
12	Isolation Valve		M2686	M2686	M2686	M2686
13	Pulley	175 PSIG	M2938 (2)	M2938 (2)	M2920 (2)	P10718A Pulley (2) P05622A Bushing (2)
13	Pulley	250 PSIG	P05008A Pulley (2) P08632A Bushing (2)	P05008A Pulley (2) P08632A Bushing (2)	M7011D (2)	P07981A Pulley (2) P05622A Bushing (2)
14	Belts		B80 (4)	B80 (4)	B81 (4)	B85 (4)
15	Starter		CONSULT FACTORY			
16	Alternator		CONSULT FACTORY			

COMPRESSOR REPAIR PARTS ILLUSTRATION

Model: PL30A

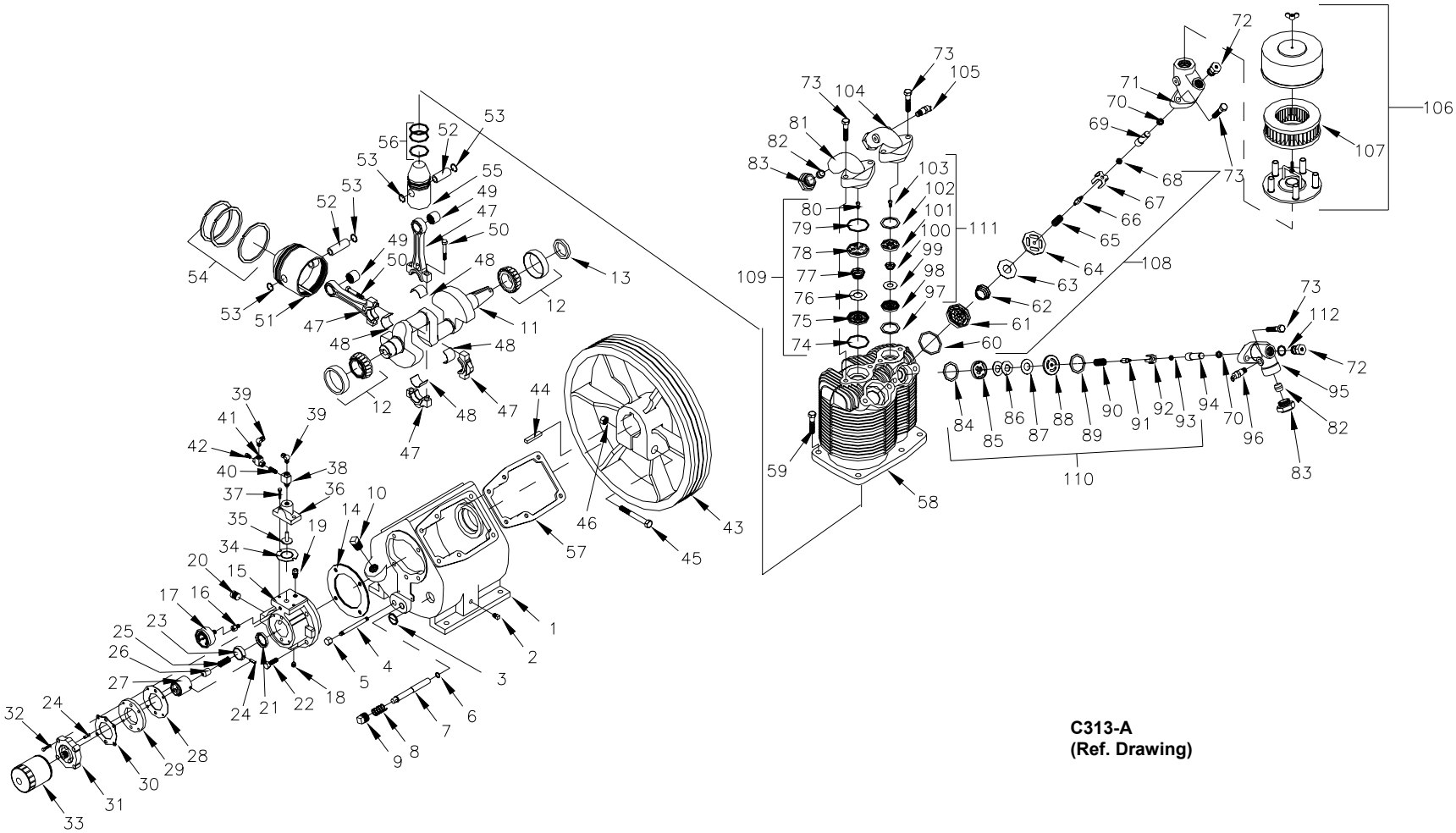

C313-A
(Ref. Drawing)

Repair Parts List
Compressor Pump Model PL30A

Ref. No.	Description	Part Number	Qty.
1	Crankcase	P07382D	1
2	1/4" Pipe plug	M2326	1
3	Oil level gauge	RE714	1
4	3/8 x 4" Pipe nipple	M492	1
5	3/8" Pipe cap	M461	1
6	O-Ring	P07428A	1
7	Oil screen	P07381B	1
8	Spring	P07427A	1
9	1/2" Pipe plug	M998B	1
10	3/4" Pipe plug	M459	1
11	Crankshaft	P12415C	1
12	Main bearing	Z8981	2
13	Oil seal	OSN36A	1
14	Bearing housing gasket set	Z12117	1
15	Bearing housing	P11543D	1
16	Adaptor	P11513A	1
17	Oil pressure gauge	P07430A	1
18	1/4" Pipe plug	P07277A	1
19	3/8 x 1/4" NPT Straight compression fitting	M2864	1
20	3/8" Pipe plug	M2427	1
21	Oil seal	P07426A	1
22	7/16-20 x 1" 12 PT Cap screw	M2426	4
23	Oil pump adaptor ring	P10074A	1
24	Coiled spring pin	M3426	2
25	Oil pump spring	P10071A	1
26	Oil pump plunger	P10072A	1
27	Oil pump	P10070A	1
28	Oil pump cover spacer gasket	P11059A	1
29	Oil pump cover spacer	P11496A	1
30	Oil pump cover gasket	P11512A	1
31	Oil pump cover	P10957C	1
32	1/4-20 x 1 1/4" Hex head cap screw	M3273	4
33	Oil filter	P10066A	1
34	Diaphragm	P07585A	1
35	Plunger	P07586A	1
36	Unloader housing	P07386B	1
37	5/16-18 x 1" Hex head cap screw	M2596	2
38	Control valve	P08691A	1
39	1/4 x 1/8" NPT 90 Compression fitting	M2868	2
40	1/8" Close pipe nipple	M1012B	1
41	Shuttle valve	P08692A	1
42	1/4 x 1/8" NPT Straight compression fitting	M2863	1
43	Flywheel	NR367B	1
44	Key	RE208	1
45	1/2-13 x 4" Hex head cap screw	M738	1
46	1/2-13 Hex nut	M2955	1
47	Connecting rod assembly (includes items 48, 49 & 50)	Z12118	4
48	Bearing insert (sold in pairs)	Z3254	4
49	Piston pin bearing	R1037	4
50	Connecting rod bolt	M1583	8
51	Low pressure piston with pin	ZR154	2
52	Piston pin	R1021	4
53	Piston pin retaing ring	R10102	8
54	Low pressure piston ring set	Z798	2
55	High pressure piston with pin	ZP02709C	2
56	High pressure piston ring set	Z797	2
57	Cylinder flange gasket	NR29A	2
58	Cylinder	P12237D	2
59	7/16-20 x 1 1/4" Hex head cap screw	M2345	12

Repair Parts List
Compressor Pump Model PL30A

Ref. No.	Description	Part Number	Qty.
60	Valve gasket	P04134A	2
61	Intake valve cage	M2098	2
62	Valve spring	RE1458	2
63	Valve disc	RE1470	2
64	Intake valve seat	RE1471A	2
65	Unloader spring	P09084A	2
66	Guide stem	P09083A	2
67	Unloader finger	P09085A	2
68	Locking hex nut	P09086A	2
69	Unloader piston	P09923A	2
70	O-Ring	P02547A	4
71	Low pressure intake manifold	P09670C	2
72	Unloader cylinder	P02306B	4
73	3/8-16 x 1 3/4" Hex head cap screw	P05005A	16
74	Valve gasket	P04135A	2
75	Discharge valve seat	M2097	2
76	Valve disc	RE1061	2
77	Valve spring	RE1059	2
78	Discharge valve cage	M2099	2
79	Valve gasket	P04135A	2
80	10-32 x 1/2" Hex head cap screw	M3220	2
81	Low pressure discharge manifold	RE102E	2
82	Ferrule	SE542	4
83	Compression nut	SE541	4
84	Valve gasket	P09171A	2
85	Intake valve cage	P14224B	2
86	Valve spring	P13866A	4
87	Valve disc	P13865A	2
88	Intake valve seat	P14118B	2
89	Valve gasket	P09170A	2
90	Unloader spring	P01882A	2
91	Guide stem	P09296A	2
92	Unloader finger	P14119A	2
93	Locking hex nut	P09086A	2
94	Unloader piston	P09923A	2
95	High pressure intake manifold	P12304B	2
96	Interstage pressure relief valve	P03592A	2
97	Valve gasket	P04136A	2
98	Discharge valve seat	RE757A	2
99	Valve disc	RE1062	2
100	Valve spring	RE760	2
101	Discharge valve cage	M2100	2
102	Valve gasket	P04137A	2
103	10-32 x 1/2" Hex head cap screw	M3220	2
104	High pressure discharge manifold	P12303B	2
105	Pressure relief valve	P09704A	1
106	Intake filter	P04999A	2
107	Intake filter element	P05050A	2
108	Low pressure intake valve/unloader assembly	Z4877	2
109	Low pressure discharge valve assembly	Z813	2
110	High pressure intake valve/unloader assembly	Z11938	2
111	High pressure discharge valve assembly	Z115	2
112	Unloader cylinder gasket	P00746A	2
	Complete compressor pump gasket set (items 6,14,28,30, & 57)	Z9120	1
	Low pressure piston kit (items 55 & 56)	Z9101	2
	High pressure piston kit (items 51 & 54)	Z9100	2
	Complete compressor pump ring set (items 54 & 56)	Z9085	1

COMPRESSOR REPAIR PARTS ILLUSTRATION
Model: PL30A

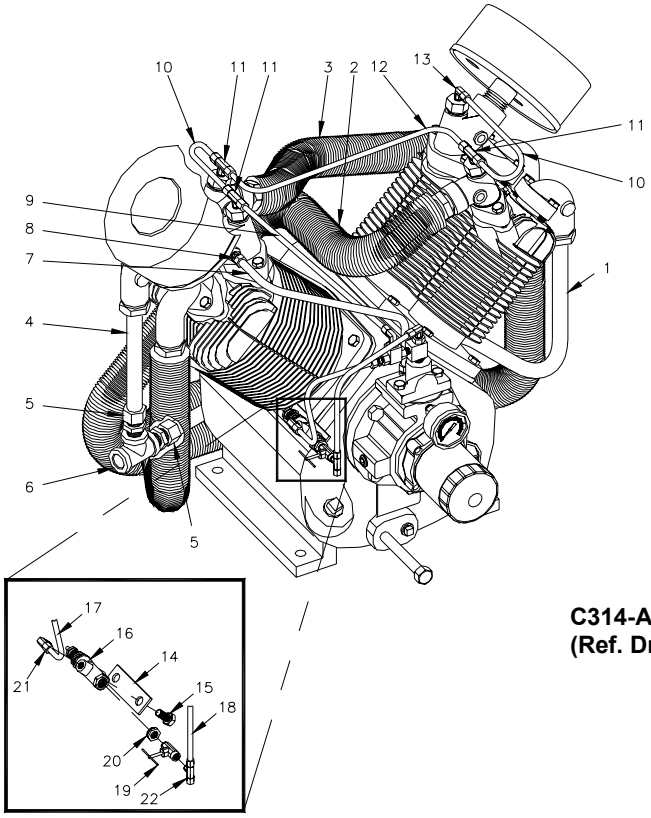

C314-A
(Ref. Drawing)

Repair Parts List
Models PL30A

Ref. No.	Description	Part Number	Qty.
1	Discharge tube (includes fittings)	ZP08132B	1
2	Intercooler (includes fittings)	Z9141	1
3	Intercooler (includes fittings)	Z9142	1
4	Discharge tube (includes fittings)	ZM2474-8	1
5	3/4 x 3/4" NPT Compression fitting	M2867	2
6	3/4"Pipe tube	M3140	1
7	Breather tube	P10842A	1
8	3/8 x 1/4" NPT Straight compression fitting	M2864	1
9	Head unloader tube	P10841A	1
10	Manifold tube (includes fittings)	Z9172	2
11	1/4 x 1/4 x 1/8" NPT Tee compression fitting	M2879	3
12	Intermediate tube	P08641B	1
13	1/4 x 1/8" NPT 90 Compression fitting	M2868	1
14	Pilot valve bracket	M807	1
15	3/8-16 x 1/2" Hex head cap screw	M3465	1
16	Pilot valve (140 – 170 psig)	M2853	1
16	Pilot valve (90 – 120 psig)	M2854	1
16	Pilot valve (215 – 245 psig)	M2858	1
17	Shuttle valve tube	P10837A	1
18	Control valve tube	P10840A	1
19	Needle valve	P07717A	1
20	1/4 x 1/8" Pipe bushing	M947B	1
21	1/4 x 1/8" NPT 90 Compression fitting	M2868	1
22	1/4 x 1/4 x 1/8" NPT Tee compression fitting	M2879	1

UNIT HAZARD DECAL LISTING

PAGE	DESCRIPTION	PART NO.
28	PRODUCT LIABILITY DECAL SHEET - MASTER	P10157A
	Unit Pressure Setting	1
	NOT USED	2
	DANGER – Breathing Air	3
	DANGER – Drain Tank Daily	4
	WARNING – Pressure/Safety Valve	5
	NOT USED	6
	DANGER – Valve Maintenance	7
	DANGER – High Voltage	8
	WARNING – Hot Surfaces	9
	WARNING – Do Not Remove Fan Guard	10
	NOTICE - Lubricant	11a
	NOT USED	11b
	DECAL – Synthetic or Food Grade Inserts	12
	NOT USED	13
	DECAL – Pressure Setting: 140-175PSIG	14
	DECAL – Pressure Setting: 215-250PSIG	14
	NOTICE – Read and Retain Manuals	15
	INSTRUCTIONS – Dual Control	16
	DECAL – Rotation Direction	17
	NOT USED	18

PUMP HAZARD DECAL LISTING

PAGE	DESCRIPTION	PART NO.
29	PUMP DECAL SHEET – MASTER	P13805A
	NOT USED	A1
	NOTICE - Lubricants	A2
	DECAL – Rotation Direction	B
	NOTICE – Read and Retain Manuals	C
	DANGER – Breathing Air	D
	DECAL – Made in the United States of America	E
	IMPORTANT NOTICE – Motor Burn-outs	F

UNIT HAZARD DECALS

UNIT PRESSURE SETTING

UNIT PRESSURE FACTORY SET AT

1

UNIT PRESSURE SETTING

UNIT PRESSURE FACTORY SET AT

1

WARNING

DO NOT START ENGINE UNLESS TANK PRESSURE IS BELOW 130 PSIG.

TO REDUCE TANK PRESSURE, OPEN VALVE ADJACENT TO THIS DECAL.

2

DANGER

Air from this compressor must not be used for food processing or breathing without adequate filtering. Failure to comply will result in injury or death.

3

DANGER

DRAIN THIS TANK DAILY!

Failure to drain moisture will corrode tank material and lead to tank failure which will cause equipment damage, injury, or death.

4

WARNING

• RELIEVE TANK PRESSURE BEFORE SERVICING. Failure to do so can result in injury.

• DO NOT ADJUST PRESSURE SWITCH, PILOT VALVE, OR SAFETY VALVES. Exceeding factory settings can cause equipment damage and injury.

5

MODEL:

SERIAL NO:

6

NOTICE

YOUR COMPRESSOR HAS BEEN TESTED AND SHIPPED WITH

ChampLub

FOR OPTIMUM PERFORMANCE USE ONLY GENUINE CHAMPION PARTS AND LUBRICANTS. CONTACT LOCAL CHAMPION DISTRIBUTOR FOR ADDITIONAL LUBRICANT AND REPLACEMENT PARTS.

11a

FOOD GRADE

SYNTHETIC

12

NOTICE

YOUR COMPRESSOR HAS BEEN TESTED AND SHIPPED WITH

AEON

FOR OPTIMUM PERFORMANCE USE ONLY GENUINE GARDNER DENVER PARTS AND LUBRICANTS. CONTACT LOCAL GARDNER DENVER DISTRIBUTOR FOR ADDITIONAL LUBRICANT AND REPLACEMENT PARTS.

11b

AC-SY

AC-HC

AC-FG

13

85-115 PSIG
95-125 PSIG
130-165 PSIG
140-170 PSIG
140-175 PSIG
215-250 PSIG
20-40 PSIG
60-80 PSIG
60-90 PSIG
70-90 PSIG
70-100 PSIG
80-100 PSIG

14

RESET

RESET

18

DANGER

Valves must be replaced in original position. Failure to do this will result in equipment damage, injury, or death. Do not disassemble valves.

7

DANGER

HIGH VOLTAGE

DISCONNECT POWER SOURCE BEFORE SERVICING.

8

WARNING

Do not touch hot surfaces! Contact with these surfaces can cause injury.

9

WARNING

Do not touch hot surfaces! Contact with these surfaces can cause injury.

9

WARNING

DO NOT REMOVE BELT OR FAN GUARD

Removal will expose rotating parts which can cause severe injury and/or property damage.

10

WARNING

DO NOT REMOVE BELT OR FAN GUARD

Removal will expose rotating parts which can cause severe injury and/or property damage.

10

ROTATION IN DIRECTION OF ARROW

ROTATION IN DIRECTION OF ARROW

ROTATION IN DIRECTION OF ARROW

ROTATION IN DIRECTION OF ARROW

ROTATION IN DIRECTION OF ARROW

ROTATION IN DIRECTION OF ARROW

17

INSTRUCTIONS

DUAL CONTROL

This unit is equipped with a dual control valve.
Open valve completely for continuous run operation.
Close valve completely for start-stop operation.

16

NOTICE

Read, understand and retain all labels and Owners Manuals before using this equipment.

IMPORTANT: Please keep the operating Instructions with this compressor unit.

15

Master Decal Set
P/N P10157A

PUMP HAZARD DECALS

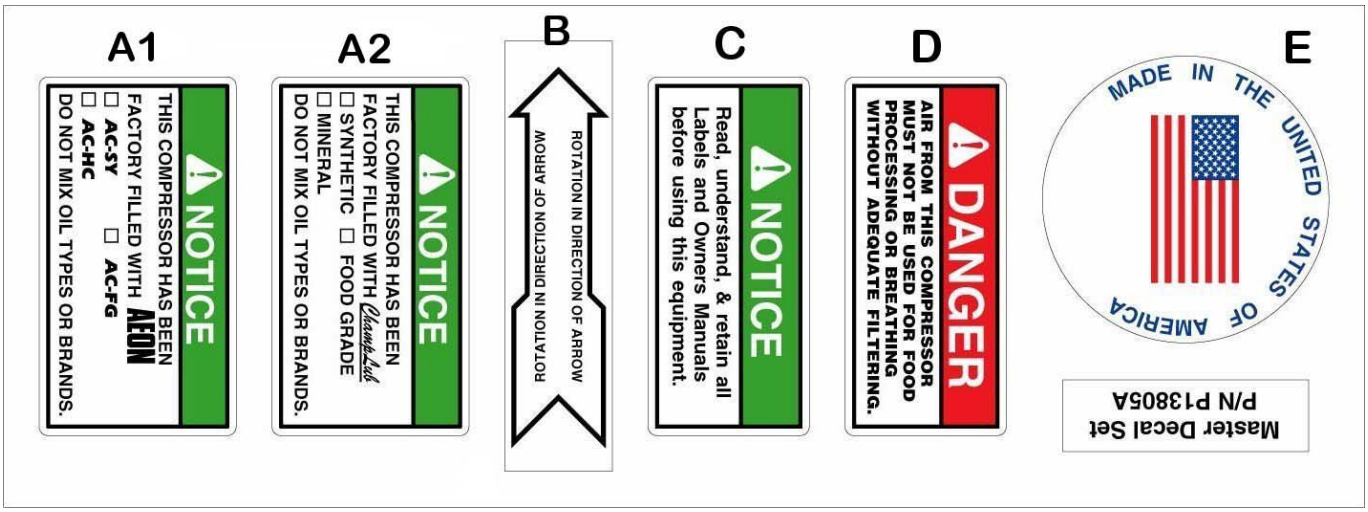

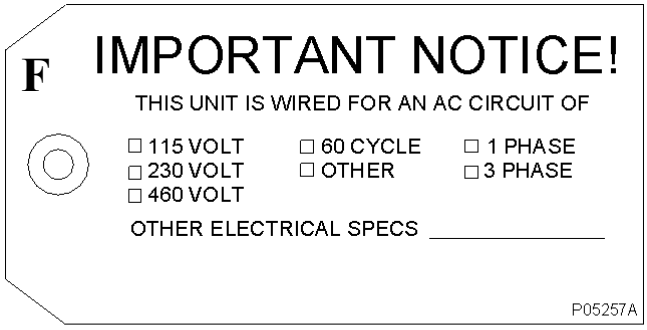

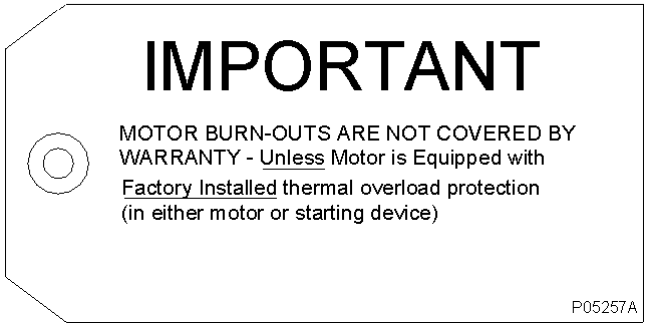

RECORD OF MAINTENANCE SERVICE

DAILY
- CHECK OIL LEVEL
- DRAIN MOISTURE FROM TANK

WEEKLY
- CLEAN FILTER
- CLEAN COMPRESSOR
- CHECK V-BELTS

MONTHLY
- INSPECT AIR SYSTEM

EVERY 3 MONTHS
- CHANGE OIL & OIL FILTER
- INSPECT VALVE ASSEMBLIES
- TIGHTEN ALL FASTENERS
- TEST PRESSURE RELIEF VALVE

RECORD OF MAINTENANCE SERVICE

DAILY
- CHECK OIL LEVEL
- DRAIN MOISTURE FROM TANK

WEEKLY ● CLEAN FILTER ● CLEAN COMPRESSOR ● CHECK V-BELTS					MONTHLY ● INSPECT AIR SYSTEM		EVERY 3 MONTHS ● CHANGE OIL & OIL FILTER ● INSPECT VALVE ASSEMBLIES ● TIGHTEN ALL FASTENERS ● TEST PRESSURE RELIEF VALVE

FOR PARTS: REFER TO PARTS DEPOT LIST ACCOMPANYING THIS MANUAL.

www.championpneumatic.com

Champion
1301 North Euclid Avenue
Princeton, Illinois 61356 USA
Phone (815) 875-3321
Fax (815) 872-0421
E-mail: champion@championpneumatic.com

Plants in Princeton, IL, and Manteca, CA

Due to Champion's continuing product development program, specifications and materials are subject to change without notice or obligation